GUSTO

Ideal Standard

BD420XX
BD552XX

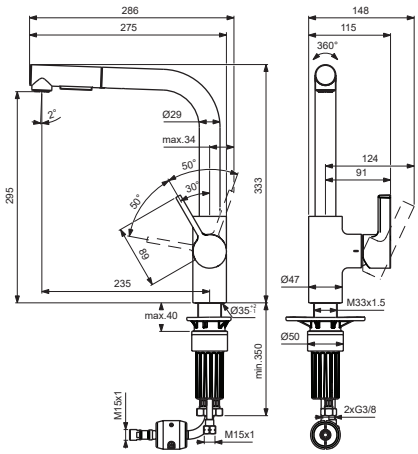

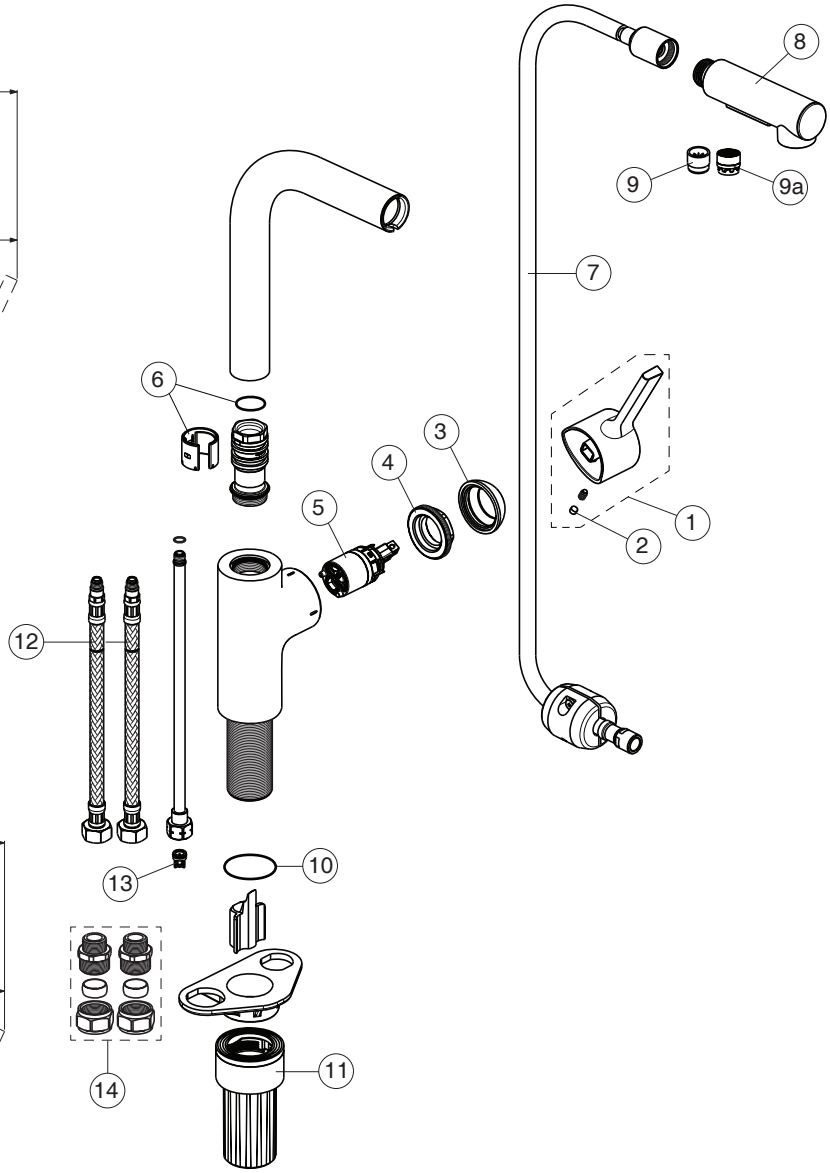

BD473XX

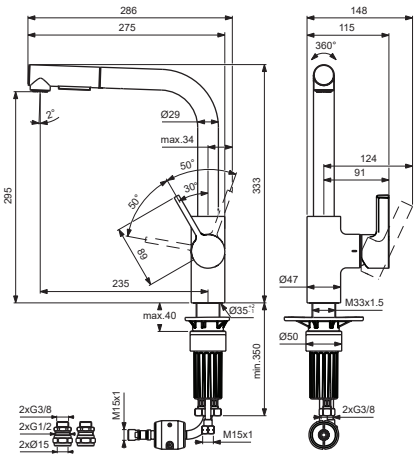

For XX=Coverage-Designate:
AA=chrome,**GN**=silver storm
A2=brushed gold,**J4**=sunset rose

For Instance:
B961813AA for chrome

Pos.	Signify	Spare parts-Nr.	Quantity	Pos.	Signify	Spare parts-Nr.	Quantity
1	Lever	B961813XX	1 Set	12	Fl.hose G3/8/M8x1 /L500	A962005NU	1 Pcs.
2	Rubber button	A963751NU	1 Pcs.	13	Rv-patrone	A960944NU	1 Pcs.
3	Cover cap	B961815XX	1 Pcs.	14	Connector G3/8,Ø15-set	B960845NU	1 Set
4	Screw M41x1.5/M33x1.5	B961814NU	1 Pcs.				
5	Cartridge Ø28mm	A861397NU	1 Set				
6	Sealing set for tub.spout	B961582NU	1 Set				
7	Plastic hose L1500	B961816AA	1 Pcs.				
	Pull-down spray 2F	B961824XX**	1 Pcs.				
8	Pull-down spray 2F-5 l/min	B961825XX*	1 Pcs.				
	Pull-down spray 2F-7 l/min	B961826XX***	1 Pcs.				
9	Flow straightner	B960510NU***	1 Pcs.				
9a	Stream regulator	A960268NU*	1 Set				
10	O-Ring Ø36.2x2.62	A962575NU	1 Pcs.				
11	Fixation set	B961807NU	1 Set				

**for BD552XX **for BD420XX ***for BD473XX*