JOY NEO

Ideal Standard

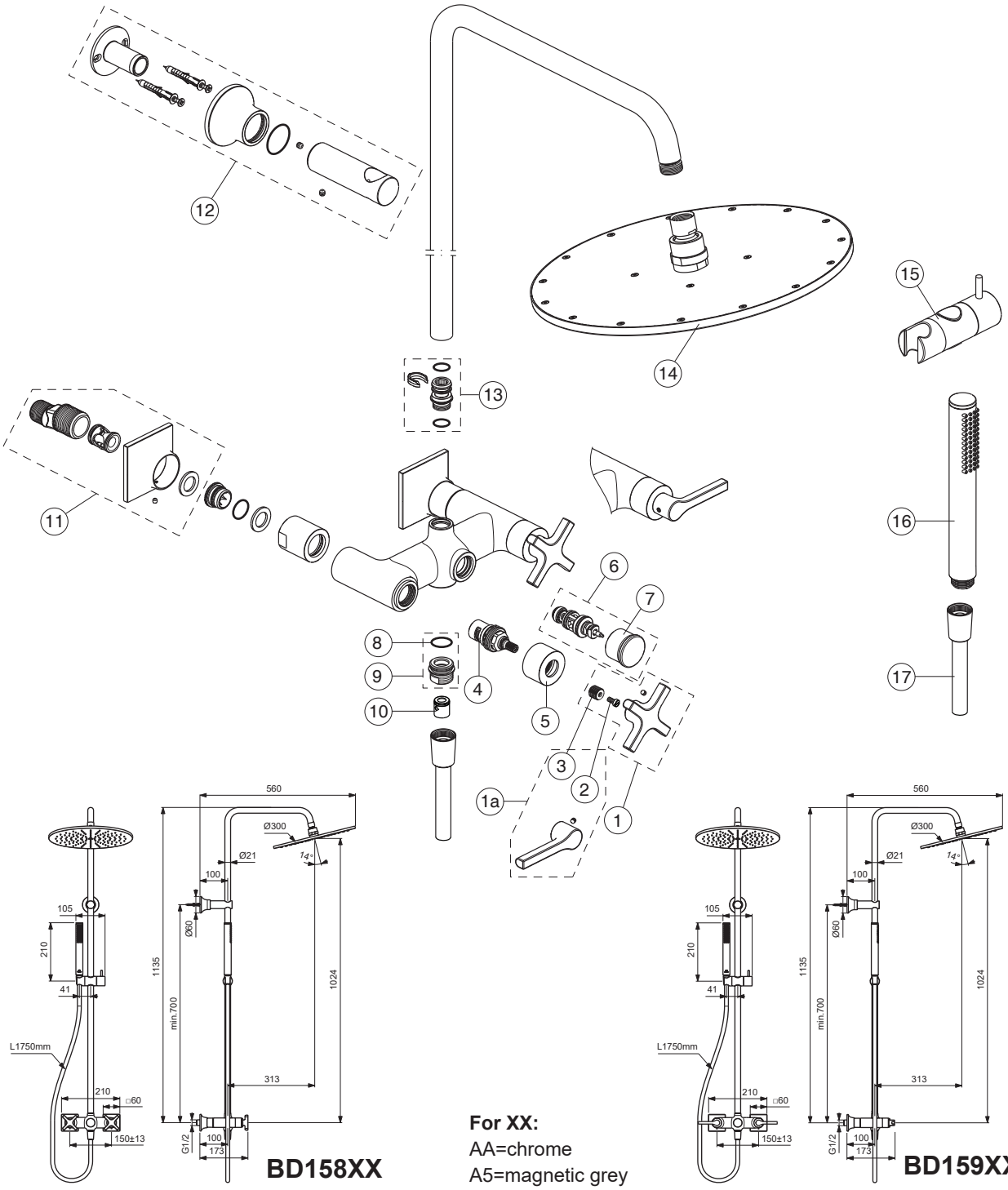

For XX:
AA=chrome
A5=magnetic grey

Pos.	Signify	Spare parts-Nr.	Quantity	Pos.	Signify	Spare parts-Nr.	Quantity
1	Handle-compl.	B961756XX	1 Set	13	Sealing set	B961762XX	1 Set
1a	Handle-compl.	B961761XX	1 Set	14	Shower head Ø300mm	A5803XX	1 Pcs.
2	Screw M4x8	B961631NU	1 Pcs.	15	Slider set	B961024XX	1 Pcs.
3	Insert	B961326NU	1 Pcs.	16	Handshower	BC774XX	1 Pcs.
4	Ceramic valve G1/2,90°-LH	A861243NU*	1 Set	17	Shower hose L1750mm	A4109XX	1 Pcs.
	Ceramic valve G1/2,90°-RH	A861244NU*	1 Set				
5	Rosette	B961758XX	1 Pcs.				
6	Diverter automatic	B961757XX	1 Set				
7	Pull knob	A860901XX	1 Pcs.				
8	O-Ring Ø18.2x1.7	A961640NU	2 Pcs.				
9	Nipple M22x1-G1/2	B964675XX	1 Pcs.				
10	Non return valve	B961346NU	1 Pcs.				
11	S-connection	B961759XX	1 Set				
12	Console-compl.	B961763XX	1 Set				

**Universal set (not all parts needed)*