CERAPLUS 2

Ideal Standard

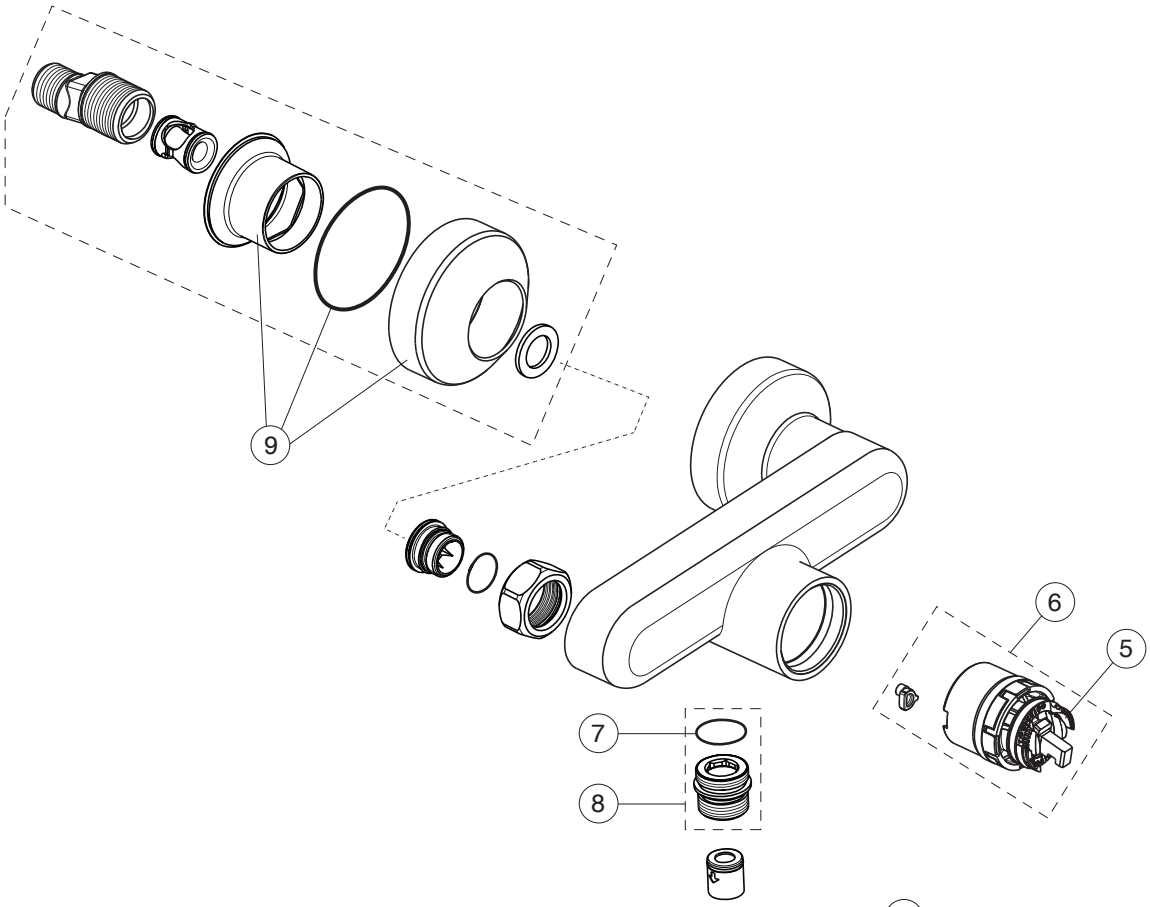

BC118AA

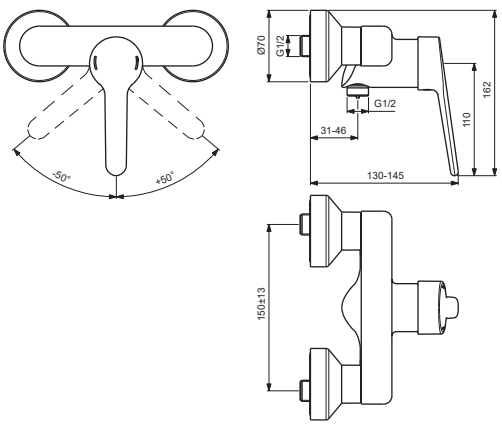

Pos.	Signify	Spare parts-Nr.	Quantity	Pos.	Signify	Spare parts-Nr.	Quantity
1	Lever,w/logo-set	B961435AA	1 Pcs.				
2	Cap decorative	B960473AA	1 Pcs.				
3	Cap M38x1.5	B961438AA	1 Pcs.				
4	Screw M41x1.5/M38x1.5	B961374NU	1 Pcs.				
5	Hot limit stop	A861181NU	1 Pcs.				
6	Cartridge Ø38mm	A861156NU*	1 Set				
7	O-Ring Ø18.2x1.7	A961640NU	2 Pcs.				
8	Nipple M22x1-G1/2	B964675AA	1 Pcs.				
9	Escutcheon-compl.	B960365AA	1 Set				

**Universal set (not all parts needed)*