ACTIVE (B8066AA)

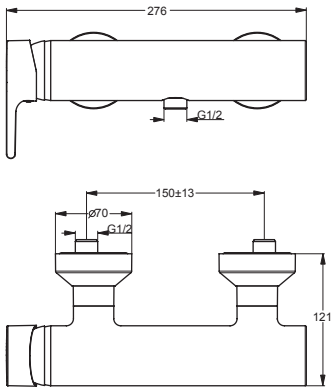

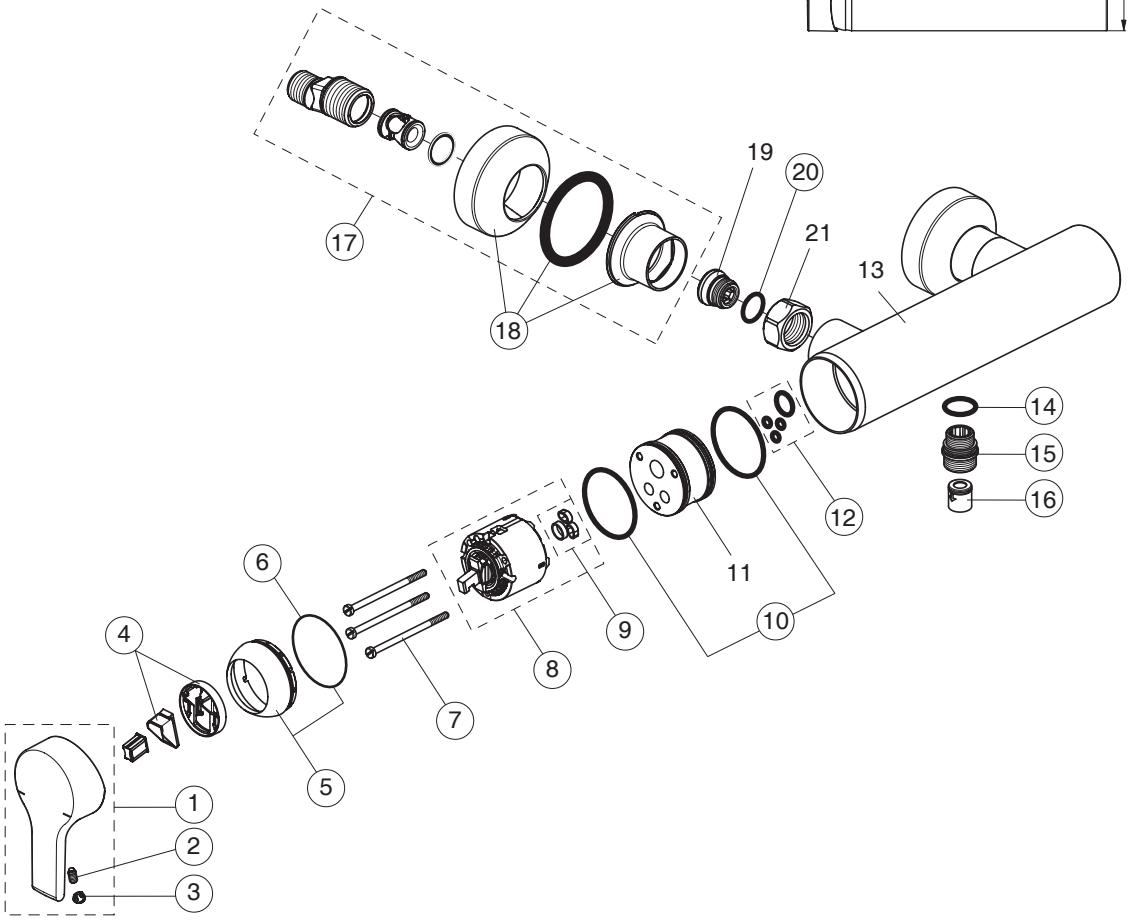

Pos.	Signify	Spare parts-Nr.	Quantity	Pos.	Signify	Spare parts-Nr.	Quantity
1	Lever(D47),	B960672AA	1 Pcs.	14	O-Ring∅17x2	A961810NU	2 Pcs.
	w/logo ISI-compl.			15	Nipple G1/2-M18x1.5	B960280AA	1 Pcs.
2	Screw M5x10	A963309NU	1 Pcs.	16	Non return valve	A962594NU	2 Pcs.
3	Cap decorative	B960473AA	1 Pcs.	17	S-connections-compl.	B960647AA	1 Set
4	Volume stop	A860700NU	1 Pcs.	18	Escutcheon-compl.	B960365AA	1 Pcs.
5	Cap,w/O-Ring-compl.	B960484AA	1 Set	19	Sealing M19x1.5LH		2 Pcs.
6	O-Ring∅40x1	B960277NU	1 Pcs.	20	O-Ring ∅15.6x1.78	A961182NU	2 Pcs.
7	Screw M4x69	A963783NU	3 Pcs.	21	Nut G3/4		2 Pcs.
8	Cartridge ∅47N	A960500NU	1 Pcs.				
9	O-Ring-set	A961155NU	1 Set				
10	O-Ring ∅44x2	A961338NU	2 Pcs.				
11	Manifold for bath/shower		1 Pcs.				
12	O-Ring-set	B960485NU	1 Set				
13	Body shower		1 Pcs.				